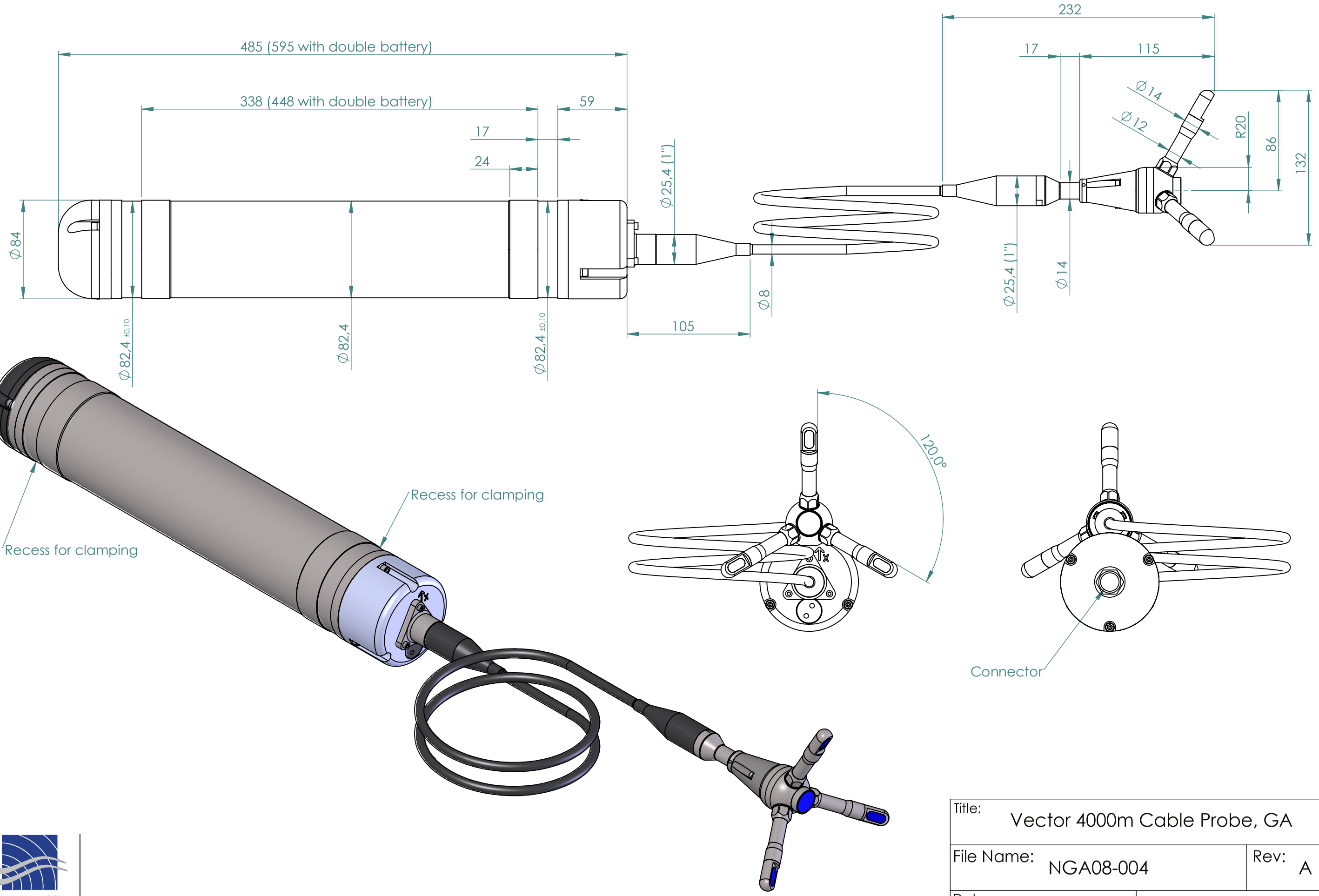

NORTEK AS

General Arrangement Drawing

Title:	Vector 4000m Cable Probe, GA	
File Name: NGA08-004		Rev: A
Date: 30.05.2016	Dimensions are in milimeters	
	Copyright Nortek AS	